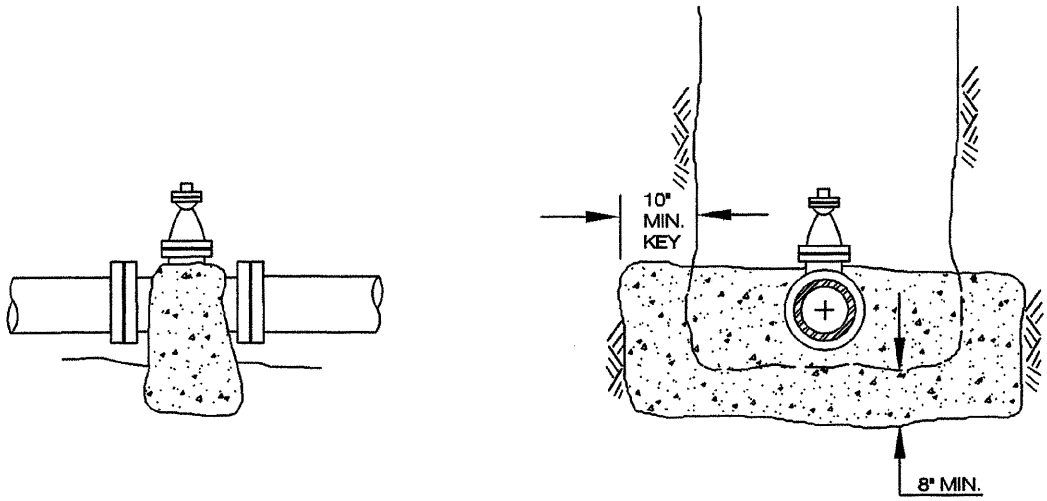

TYPE A THRUST BLOCK

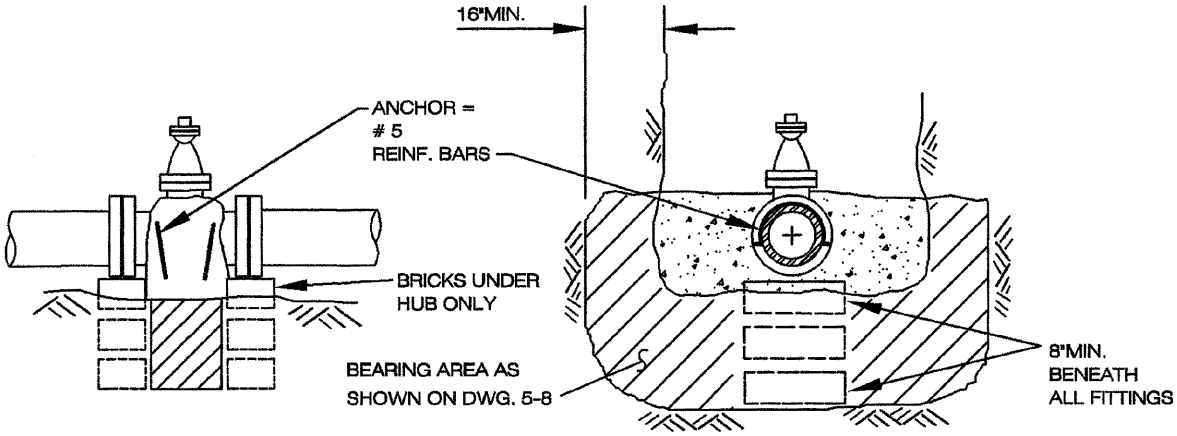

TYPE B THRUST BLOCK

NOTES

1 CONC. SHALL BE 470-C-2000

2 "TYPE A" SHALL BE USED UNLESS SHOWN ON PLANS OR AS DIRECTED BY DISTRICT.

REVISIONS	APPROVED	DATE	VISTA IRRIGATION DISTRICT	PATH: (TOM) H:\STDDWGS\5-5.DWG
			CONCRETE VALVE BLOCKING	John G. Amodeo 12/2/99 JOHN AMODEO DATE R. C. E. 31161
ACAD		6/96		STANDARD DRAWING 5-5